EN

ANIMO | OptiMex

Animo stands for superb coffee, award-winning designs, high-quality components and a clean production process. And what does that mean? Energy-efficient and long-lasting coffee machines that deliver excellent flavour every time.

DEDICATED TO EVERY CUP.

MEET OUR NEWEST MODEL THE OPTIME X.

The OptiMe X lets you brew two cups of your favourite drink at the same time, so that you can always relax and enjoy a delicious cup of coffee, espresso, cappuccino or hot chocolate together. Just the way you like it.

COFFEE JUST HOW YOU LIKE IT.

Whether it's a delicious cup of coffee, an espresso, a perfect cappuccino or a lungo brimming with flavour, it's the details that make a good cup of coffee. Only when everything is just right you can enjoy the kind of coffee you love.

And that's exactly what our latest addition to the OptiMe range delivers. We have completely redesigned the core of the OptiMe so that taste is always delivered with precision.

Are you a connoisseur, a purist, or do you just love a good cup of coffee? The OptiMe X offers the quality that you have come to expect from Animo, in a compact machine that will fit anywhere.
Cup, after cup, after cup.

The new OptiMe X.
Just the way you like it.

CHOOSE YOUR VERSION.

A STANDARD FULL BLACK
silky gloss finish

FRONT COLOUR

Black RAL 9005

SIDE AND BACK PANELS

Black RAL 9005

DECO PANEL

Black

B STANDARD FULL WHITE
silky gloss finish

FRONT COLOUR

White RAL 9003

SIDE AND BACK PANELS

White RAL 9003

DECO PANEL

Mirror

Delivery times for non-standard colour combinations on request.

DECO PANEL OPTIONS

Black (standard for black OptiMe X)

Mirror (standard for white OptiMe X)

Black abstract

Sand

A CUP OF THE FINEST COFFEE.

Freshly ground coffee beans deserve to be treated with respect, and that's all down to the brewing process: the combination of the amount of coffee, grinding degree, tamping pressure and temperature.

Animo's X-press precision brewer has been designed so that every feature can be perfectly tailored to your personal tastes.
Because that's what it takes to turn your brew into a cup of class.

Perfect coffee takes a perfect machine.

- Freshly ground coffee
- Personalised coffee, milk and sugar strength settings are easy to adjust
- The most perfect crema
- Quiet in operation
- Low maintenance and long-lasting

X.press
SWISS MADE

THE FINE ART OF BREWING.

Brewing the perfect coffee can be a breeze -if you have the right tools. OptiMe X is equipped with the X-press brewer which upgrades your machine with the following features:

- 6 - 20 gr / 25 - 350 ml Swiss X-press brewer Dispense larger cups faster
- Consistent in-cup quality and precision in taste
- Adjustable tamping pressure (7 levels)
- TWO in ONE; espresso and fresh brew coffee
- Easy to clean

With its clever combination of high-quality components and technical expertise, OptiMe X makes freshly ground coffee and a wide range of coffee styles and other drinks in no time at all. Even if you use the OptiMe X to make two cups of coffee at the same time.

- Brew two cups at once
- Easy to operate thanks to the intuitive user interface
- Follow the brewing process on the screen
- Easily adjustable personalised coffee, milk and sugar and strength settings
- Improved hot water system for excellent tea
- Standard bypass option
- Drink choice: small - medium - large
- Extra options to personalise drink

GREAT TASTE
COMPACT MACHINE.

The compact 360° design of the machine makes it a real eye-catcher in any room, whether you want it to stand out or blend in with your interior decor.

Due to its compact size, the OptiMe X can be installed anywhere. In offices, hotels, hospitals, restaurants or even self-service locations thanks to the convenient touch screen together with the user-friendly interface. Offer your guests, colleagues or clients a perfect cup of coffee or one of the many other special options.

Good taste isn't just about what you taste.

Whether it's the start of your day or a quick break: the quality of coffee makes that moment all the more special. With over 75 years of expertise integrated into the OptiMe X, you are assured of the finest quality with each and every cup. The OptiMe X can be equipped with two bean hoppers (two coffee grinders). Choose your own favourite brand of coffee beans yourself.

The OptiMe X has been designed with a capacity of around 40 to 125 cups of coffee per day, all made to the highest standardswhen it comes to quality and taste.This machine can easily beenhanced with the following options:

DECAF

- One canister filled with regular beans and decaf in the other.

- Latte+ premium milk system
- A cup dispenser
- A cup warmer
- Adjustable feet (40 mm)
- Various payment system options
- Raised bean hoppers

READY TO CONNECT.

The OptiMe X is MDB-ready, which means it can establish a telemetry link that allows you to monitor the performance of the OptiMe X remotely. This data can be used to analyse and optimise its functionality and avoid unnecessary service calls.

ANIMO | OptiMe X

LOOKING GOOD.

- Compact 360° design
- Front in black or white
- Side panels in black or white
- Attractive and user-friendly interface
- Bright OptiLight LED lighting can be adjusted to your own preference
- Beans are visible for the authentic espresso experience

360°

- Several private label options for company-specific branding on the glass front or touch screen
- Extensive options for (promotional) messages on the screen - also during the brewing process
- Various options for the background colour of the screen

- Animo engage (Iot) connection
- Gain insight in user behaviour and revenue
- All coffee machines clearly displayed on one dashboard
- MDB/DEX-UCS (EVA DTS) connection

MAINTENANCE-FRIENDLY AND LONG-LASTING.

The OptiMe X is a user-friendly machine in every respect and requires very little maintenance. It's a cinch to keep the machine in top condition every day, just follow the simple cleaning instructions on the touch screen.

DESIGNED FOR SUPERIOR PERFORMANCE

Animo has been meticulous in its selection of components and maintaining the highest standards of quality.

This has been done with a view to reliability durability and ease of use. As such, energy efficiency is one of the core values in the design of the OptiMe X.

94,4%
RECYCLEABLE

CONVENIENT TO MAINTAIN

- Made for minimum maintenance
- The new OptiMe X comes with animated instructions
- Rinsing & cleaning with the help of animations
- The ceramic discs of the grinder will last a lifetime
- Recyclability 94.4%
- Weekly complete cleaning in approx. 7 minutes
- OptiMe X is energy-efficient, with an A+ rating thanks to:
  - LED lighting
  - Extra-insulated boiler
  - Energy saving mode (in stand-by)

ENERGIE LABEL

Energy	Vending machine
Manufacturer	ANIMO
Model	OptiMe X
More efficient	
A++	
A+	A+
A	
B	
C	
D	
E	
F	
G	
Less efficient	
Total energy consumption	113 wh/L
Measured at	30 L/24h
No. of cups in ml	241 cups/ 125 ml
Energy consumption in Idle Mode	622 wh/24h

Official Test based on EVA - Energy Measurement Protocol (version 3.1B - 10/2016)

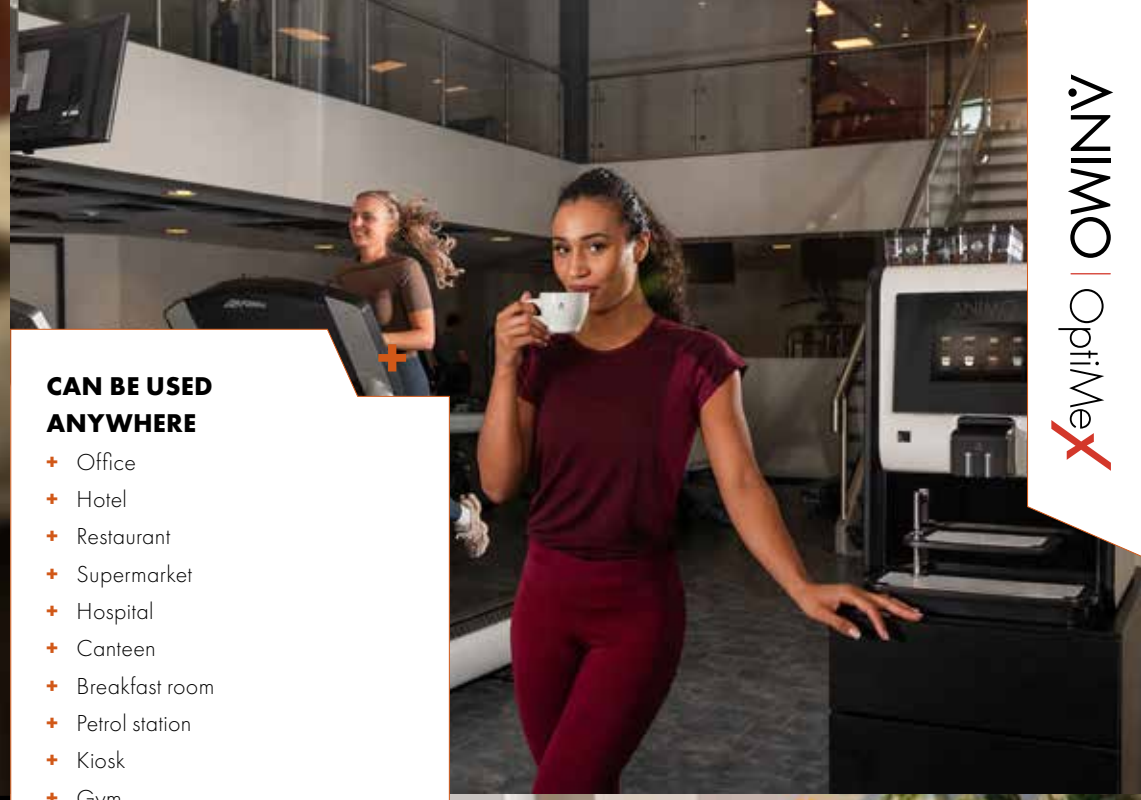

ANIMO | OptiMe X

CAN BE USED ANYWHERE

- Office
- Hotel
- Restaurant
- Supermarket
- Hospital
- Canteen
- Breakfast room
- Petrol station
- Kiosk
- Gym
- Care home
- Exhibition centre
- Airport
- School
- Theatre

... and much more.

A LOOKER IN EVERY ENVIRONMENT.

Animo's OptiMe X brews approx. 40 to up to 125 cups per day, making it suitable for locations with around 35 people. The machine can be used and placed in any setting.

.

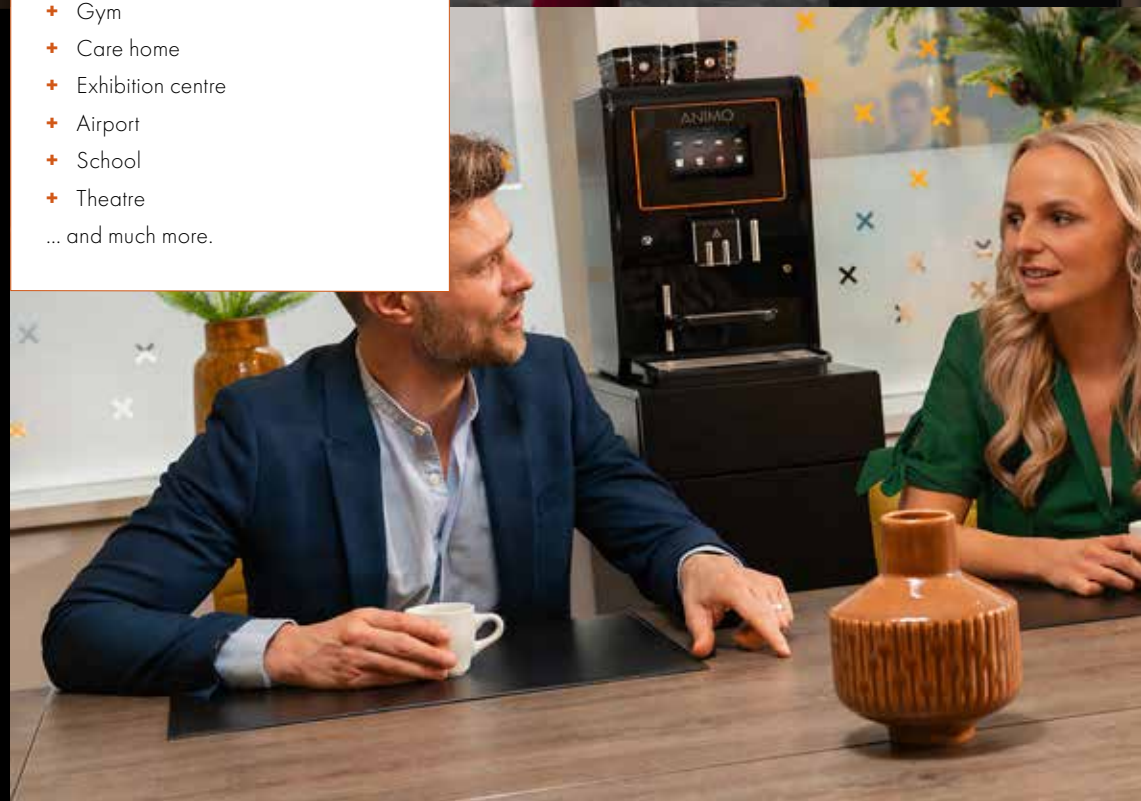

HIGH QUALITY
EXCEPTIONAL TASTE.

The OptiMe X is the latest model in our award-winning OptiMe product range. The core of the machine has been completely redesigned and now offers a number of options to further refine your coffee.

TASTE

- Consistent in-cup quality
- Adjustable tamping pressure and extraction time
- Brew two cups at the same time
- Up to 24 programmable recipes

PERSONALISATION

- Housing in black or white
- Screensaver for logo, images, video or advertisement

CAPACITY

- 1 or 2 bean hoppers
- 1 or 2 instant canisters
- Enlargement set for bean hopper
- Enlargement set for instant canister

ADD-ONS

- Latte+ premium milk system
- Compatible with various payment systems (MDB)
- Tea bag dispenser 3
- Cup dispenser
- Cup warmer
- Raised feet

OPTIME X 11

- 1 Bean hopper 1.2 kg
- 1 Instant canister
- Instant canister (topping) 1.4 kg
- Instant canister (cocoa) 1.95 kg

OPTIME X 12

- 1 Bean hopper 1.2 kg
- 2 Instant canisters
- Instant canister (topping) 0.6 kg
- Instant canister (cocoa) 0.8 kg

OPTIME X 21

- 2 Bean hoppers 2 x 0.6 kg
- 1 Instant canister
- Instant canister (topping) 1.4 kg
- Instant canister (cocoa) 1.95 kg

OPTIME X 22

- 2 Bean hoppers 2 x 0.6 kg
- 2 Instant canisters
- Instant canister (topping) 0.6 kg
- Instant canister (cocoa) 0.8 kg

OPTIME X MODELS.

Choose the OptiMe X model that best suits your needs.
The OptiMe X is available in four different models.

FRONT

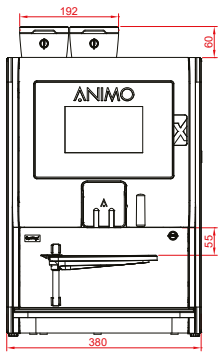

SIDE VIEW ON THE RIGHT

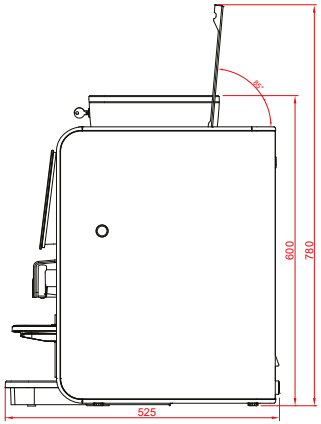

REAR

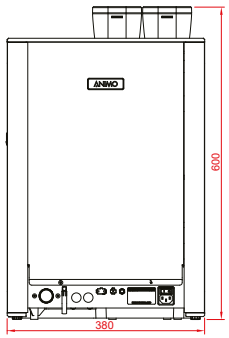

All dimensions are in millimetres.

BEVERAGE OPTIONS.

Beverage choices depend on the ingredients you select for each canister. The adjustable controls make it easy to change the various options.

OPTIONS	OM X 11	OM X 12	OM X 21	OM X 22
Coffee	✓	✓	✓	✓
Coffee with milk	✓	✓	✓	✓
Coffee with sugar		⊙	⊙	⊙
Coffee with milk & sugar		⊙		⊙
Espresso	✓	✓	✓	✓
Cappuccino	✓	✓	✓	✓
Latte Macchiato	✓	✓	✓	✓
Coffee choc		✓		✓
Chocolate	⊙	✓	⊙	✓
Wienermelange		✓		✓
Hot water	✓	✓	✓	✓
Espresso choc		✓		✓
Decaf		⊙	⊙	⊙
Tea		⊙	⊙	⊙
Hot milk	⊙	⊙	⊙	⊙
Hot chocolate		⊙		⊙
Double espresso	✓	✓	✓	✓

Not all options are available together in one machine.

✓ Standard factory configuration

⊙ Adjustable selections (depending on the ingredients chosen)

Brew two cups at the same time

SPECIAL FEATURES.

- X-press espresso brewing unit with a capacity of 6 tot 20 grams for 25 to 350 ml

- Separate spout for hot water for e.g., tea

- Use of topping options, Combined use also possible
-

- OptiLight LED lighting (in any colour)

- The coffee grinder's ceramic discs (Ditting®) last a lifetime (approx. 150,000 cups)

- Double spouts for brewing two cups at the same time and the authentic espresso experience

- Various options for the display background colour
- User support through on-screen animations

- Equip the OptiMe X with two bean hoppers (two coffee grinders)
- Writable coffee labels for the bean hoppers

+ SPECIAL FEATURES.

PERFECT COFFEE

- X-press brewer; 6 - 20 gr / 25 - 350 ml
- Adjustable tamping pressure (7 levels)
- Strength control for coffee, milk and sugar
- Double spouts for two cups at the same time and for the authentic espresso experience
- Brewing time (120 ml): 25 - 30 sec.
- 1 or 2 lockable bean hoppers
- Standard with bypass option for Americano and large cups
- Separate hot water spout
- 1 or 2 canisters for fresh coffee beans
- 1 or 2 canisters for instant ingredients
- RPM of the mixer system can be set according to preference for each topping
- Easy-to-use cleaning program

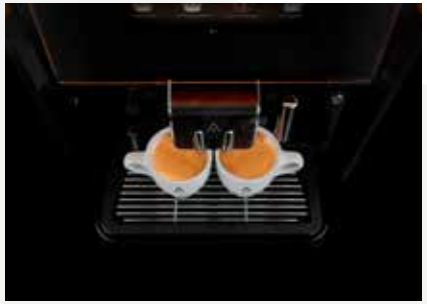

OPTIMISED DESIGN

- OptiLight LED lighting (any colour, RGB)
- Extensive options for (promotional) messages on the screen, also during the brewing process
- Screensaver with logo, image, video
- Various background colour themes
- On-screen display of allergens

THE RIGHT SIZE

- Recommended daily use: 40 to 125 cups
- Can brew two coffees/cappuccinos at the same time
- 1 - 2 canisters for instant ingredients
- Adjustable cup tray 50 - 105 mm
- Max. tap height: 165 mm
- Waste compartment volume: 550 gr (± 80 pucks)
- Dimensions W × D × H: 380 × 525 × 600 mm
- Weight: ± 34 kg

DURABILITY AND SERVICE LIFE

- Durable machine (high-quality components)
- (Ditting®) Grinder ceramic discs last a lifetime (ca.150,000 cups)
- Recyclability 94.4%
- Intelligent energy saving mode
- A+ Home energy label (according to industry standard EVA-EMP3.0B)

USABILITY AND MAINTENANCE

- 7" touch screen with intuitive user interface
- Easy on-screen (animated) user support for cleaning
- Screen notification when canister is (almost) empty
- Drip tray with overflow protection and easy connection to drain
- Lockable bean hopper(s)
- Interior lighting

HIGH-TECH SYSTEM

- Mixer system with adjustable mixer speed (RPM)
- Ultra-quick grinding, noise level max 60 dB
- Hourly capacity: 60 cups, 1 20 double cups
- Insulated stainless-steel water boiler (1.1 l) with 1800 W element and boil dry protection
- Rotary pump: 10 bar
- Adjustable water temperature
- Electrical connection: 220-240 V / 50-60Hz / 1.950 W
- Water connection: 3/4"
- Usage counter
- MDB/DEX-UCS (EVA DTS) / Animo engage connection
- Connection for USB and SD card

+ ACCESSORIES AND ADD-ONS.

ACCESSORIES

- Extension kit for bean hopper: to increase the capacity of the bean hopper(s). Max: 2x 400 gr
- Raised feet (40 mm) to connect drip tray to drain
- Drainage hose set
- Base cabinet
- Latte Macchiato stand, stand for tall latte macchiato glasses (tap height 140 mm)
- Maintenance kit
- Coffee label for bean hopper
- Cup positioning, ideal for self-service, easy to mount on cup tray

ADD-ONS

- Latte+ premium milk system
- Housing for payment systems (MDB): for a coin mechanism (with or without a coin changer machine) or contactless payment systems
- Cup warmer: capacity (stacked): approx. 60 coffee cups/144 espresso cups With 3 heating levels

CLEANING PRODUCTS

- Grindz™ Coffee grinder cleaner
- Cleaning kit
- Cleaning tablets
- Coffee grounds remover
- Descaling agent

OptiClean®

Animo offers a range of professional cleaning products under the OptiClean brand name specially developed for Animo coffee machines. Animo cleaning products have been tested by us and are guaranteed to give the best possible cleaning results.

We make premium quality coffee machines and equipment for people who want to serve good coffee. User-friendly machines that offer plenty of options and are durable and easy to maintain.

Our machines deliver a wide range of fresh, hot beverages time after time. Everything from freshly ground espresso, cappuccino or latte macchiato to tea, hot chocolate and instant soup. We have been doing business since 1950 in more than 100 countries around the world.

Because the perfect coffee takes a perfect machine.
And that takes experience, expertise and dedication.

DEDICATED TO EVERY CUP.

ANIMO
ANIMO | OptiMeX

Animo B.V. Headquarters
Assen – Netherlands

Sales Netherlands / Export Department
info@animo.nl
+31 (0)592 376 376

Animo Belgium BV
info@animo.be
+32 (0)33 130 308

Animo France
info@animo-france.fr
+33 (0) 3 80 25 06 60

Animo GmbH Germany
info@animo-gmbh.de
+49 (0)541 971 250

animo.eu

ANIMO

MADE IN THE NETHERLANDS

Subject to the exception of misprints and/or typing errors.

1012695 Rev. 4.0 070526